Protein Domains

Andrew Torda, Wintersemester 2011 / 2012, Angewandte …

Two weeks for this topic

- many proteins have separate chains

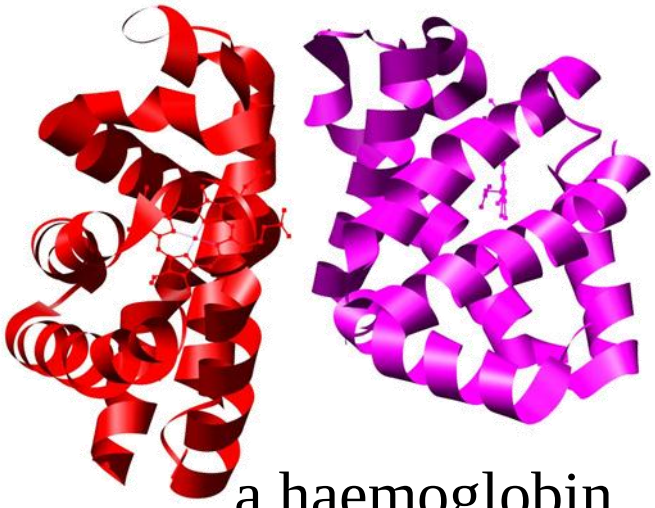

a haemoglobin
(1h97)

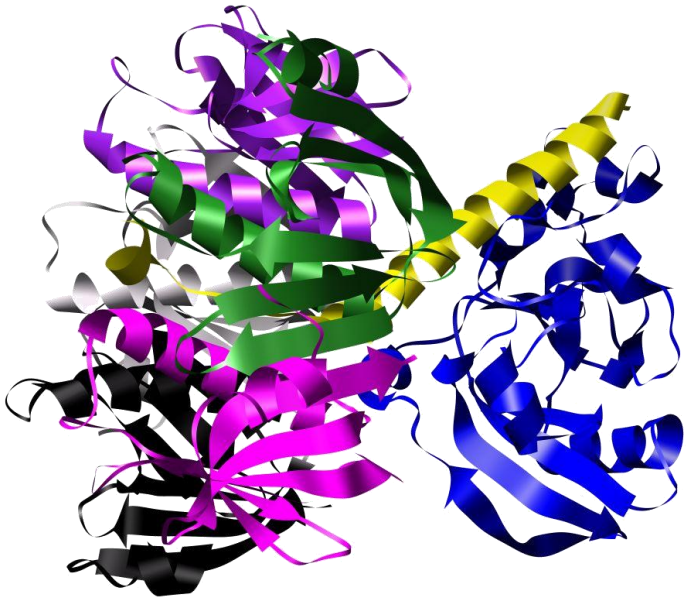

enterotoxin
(1lts) 7 chains

- what about units within one chain ?

4 domain protein

- 1cxl has 686 residues
- cleaves carbohydrate bond
  - one solid lump but…

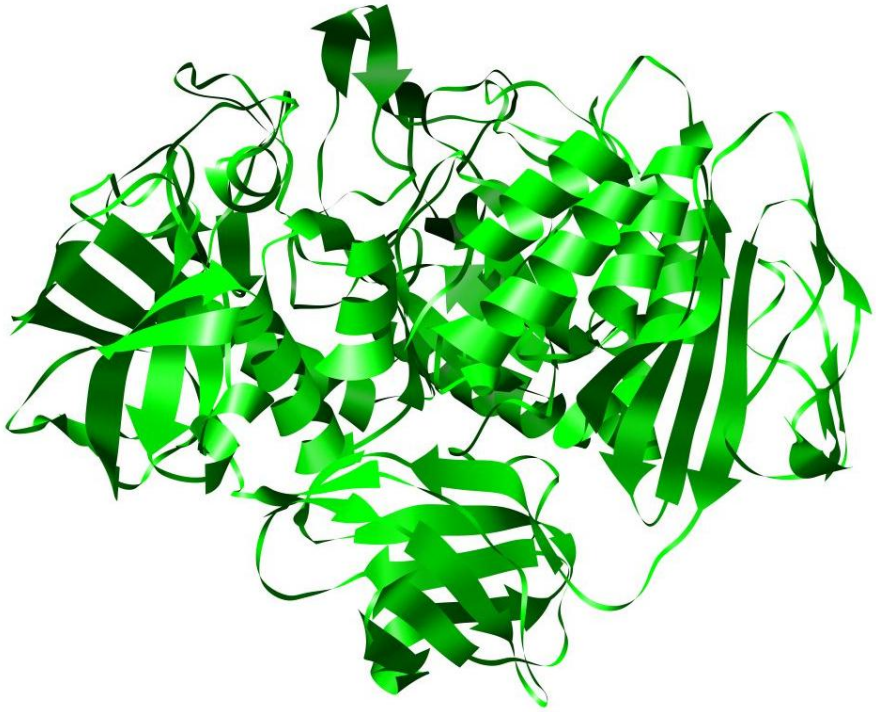

4 domain protein

1. α-amylase catalytic
2. α-amylase C-terminal
3. immunoglobulin like domain
4. starch binding

- even clearer example

3 domain protein

- 1qcf "src tyrosine kinase"
- the domains really are common to other proteins
- number of domains is not absolutely defined

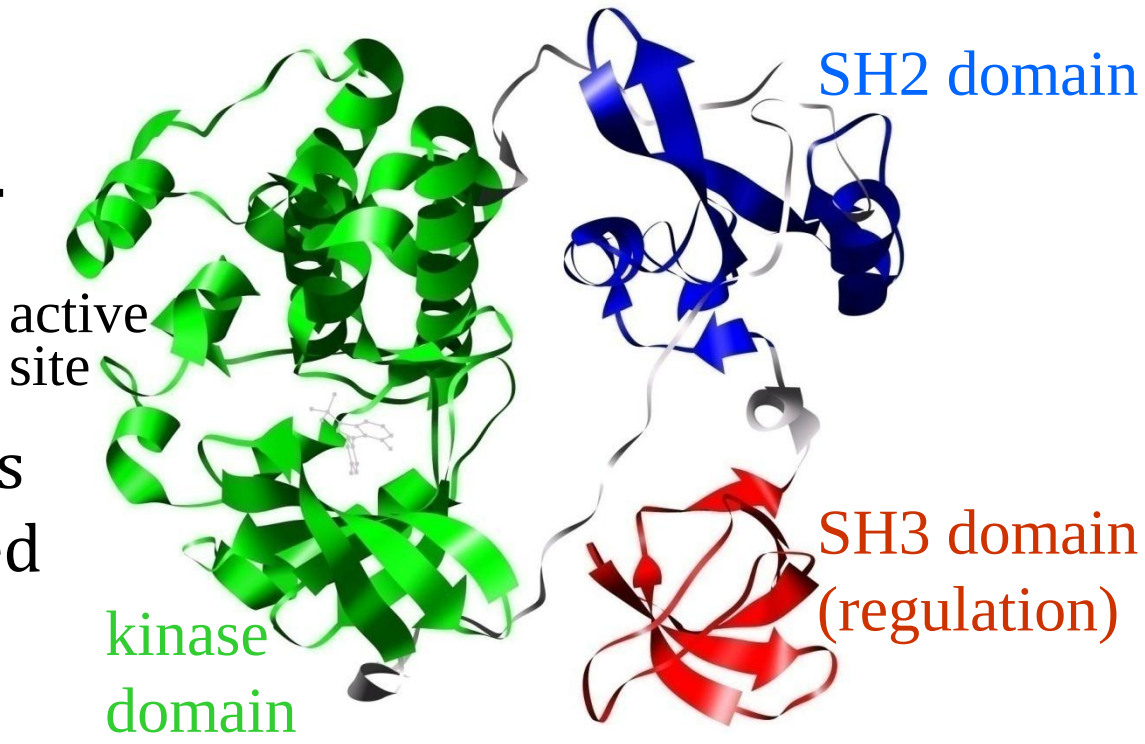

Plan

- chemistry, examples
- methods to automatically recognise domains (examples)
- chemistry – how common are domains of different sizes, types, …

Earlier history

- Term "domain" used before there were many structures
- Invented example: protein that
  - joins ADP + P_i → ATP
  - performs some oxidation
  - responds to some regulator

  - take protein + protease (splits protein in a few places)
  - cleave / break protein - get a few pieces (2, 3, 4..)
  - purify pieces

  - pieces found that
    - can bind ADP/ATP
    - bind sugars, some regulators

Earlier history

- Appeared that for some proteins
  - different functions associated with different pieces
  - refer to as "functional domains"
- Belief / claim
  - bigger proteins are made from units, combined over evolutionary time scales

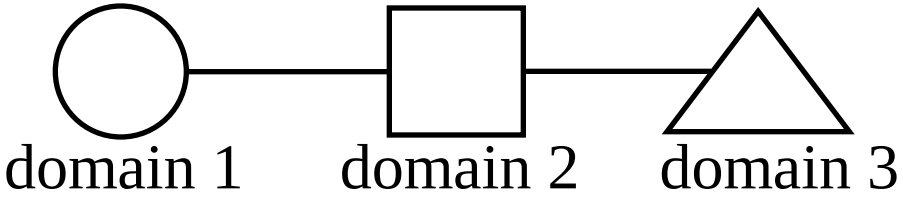

- an example…

modular protein

- diptheria toxin (1ddt) middle of picture
  - 3 domains
    - each similar to some different protein

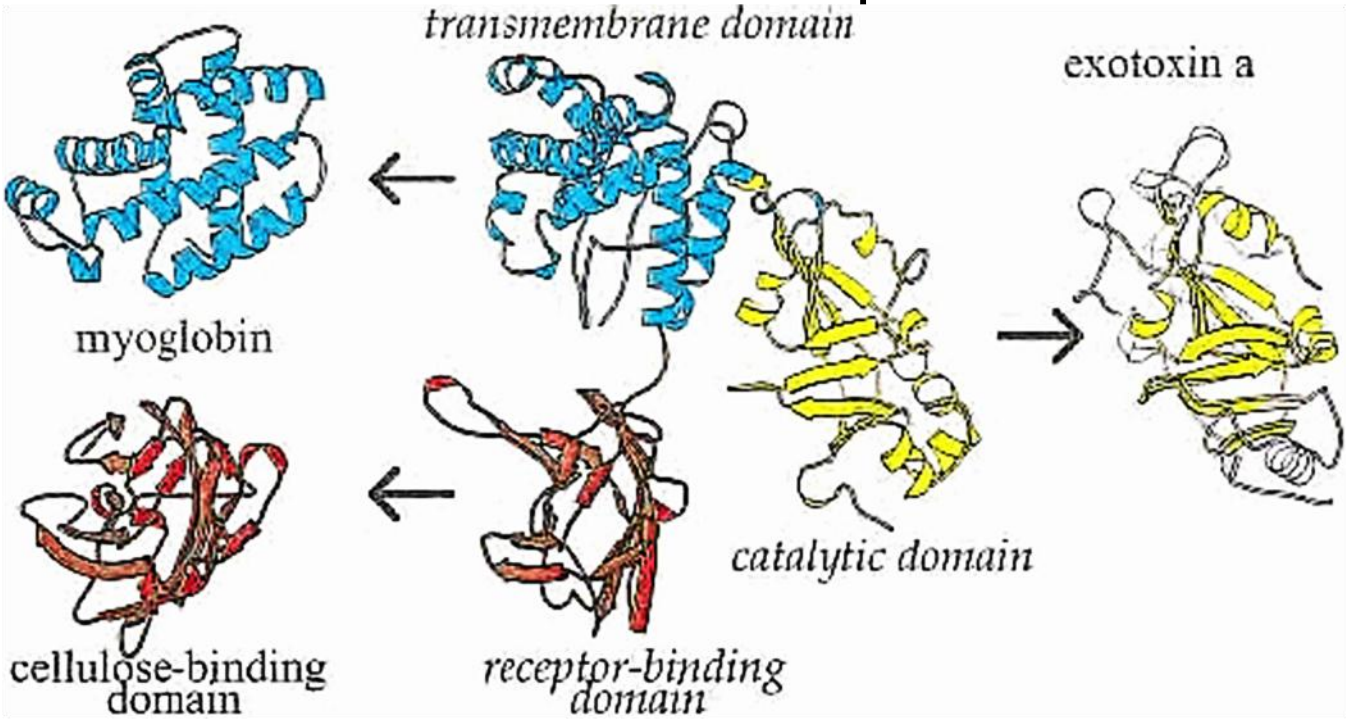

- appears as if modules are mixed together
- should be visible at sequence level…

picture from Holm, L & Sander, C. Proteins, 33, 88-96 (1998) Dictionary of recurrent domains in protein structures

Sequence level domains

- Align a group of sequences

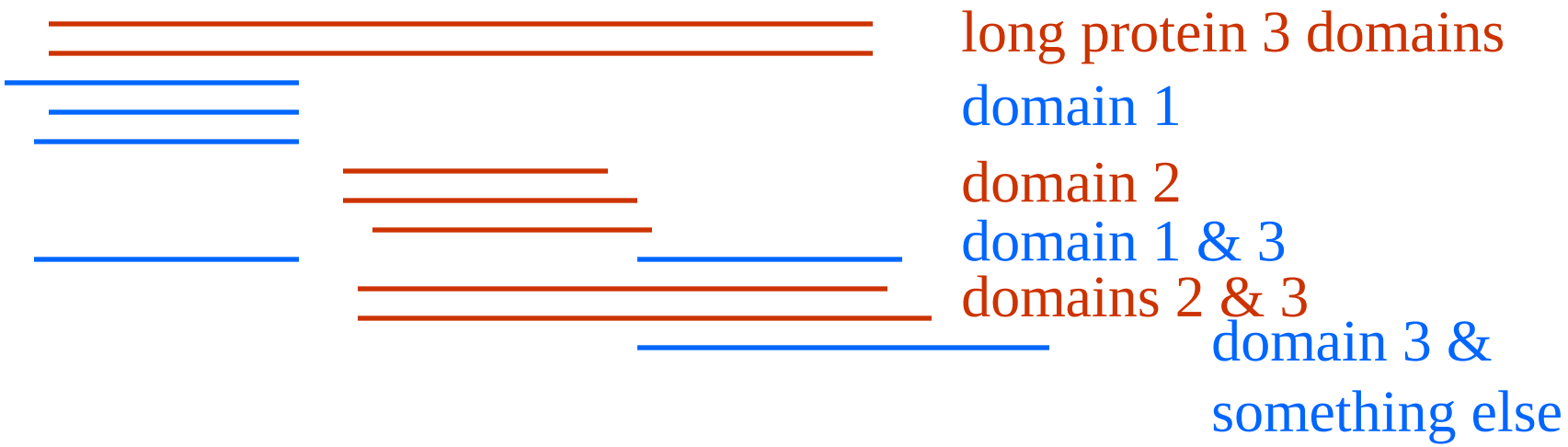

- appears to have 3 or 4 domains
- no reference to structures or function

Domain definitions summary

	structure	sequence	biochemistry
functional	not necessary	not necessary	yes
sequence-based	not necessary	yes	no
structure	yes	usually known	no

- How important ?
  - > ⅔ proteins have 2 or more domains
- part of definition
  - a piece of a protein which can fold and is stable

- Now
  - methods based on structure

Finding Domains

- a definition leads to methods
  - domain is a compact unit
- objective way to look for dense units ?
  - cluster analysis
- philosophy in cluster analysis
  - look for dense groupings
- leads to dendrogram

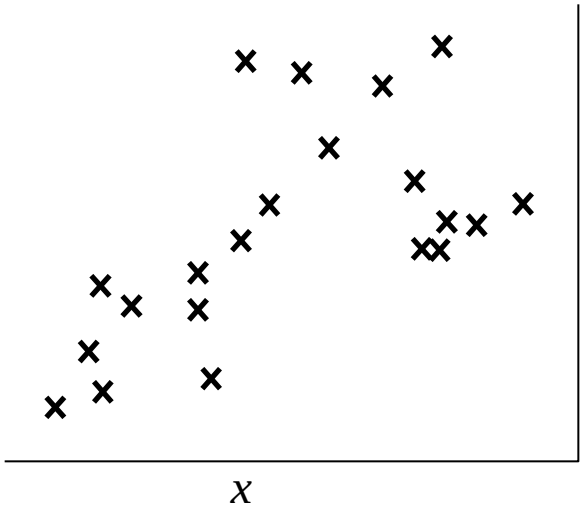

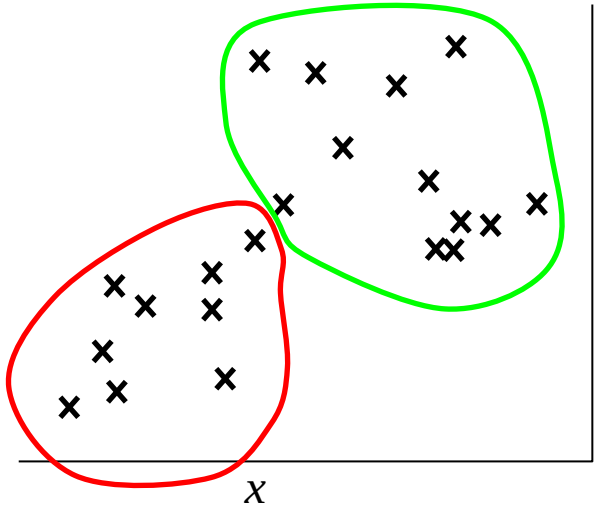

Clustering

Approach

- need a (dis)similarity matrix between every object
- here: distance between C^{α} atoms

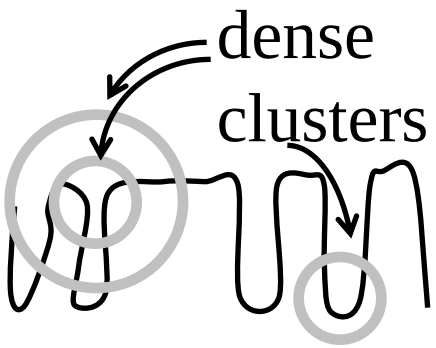

residue	1	2	⋯	N
1	0	…	…	…
2		0	…	
…			⋱	
N				0

- does this work ?

Clustering

- clustering applied to concanavalin A
  - bottom - small compact pieces
  - higher – compact units
  - looks like natural 3 domains
- number of domains is not absolutely determined
- very very very old method

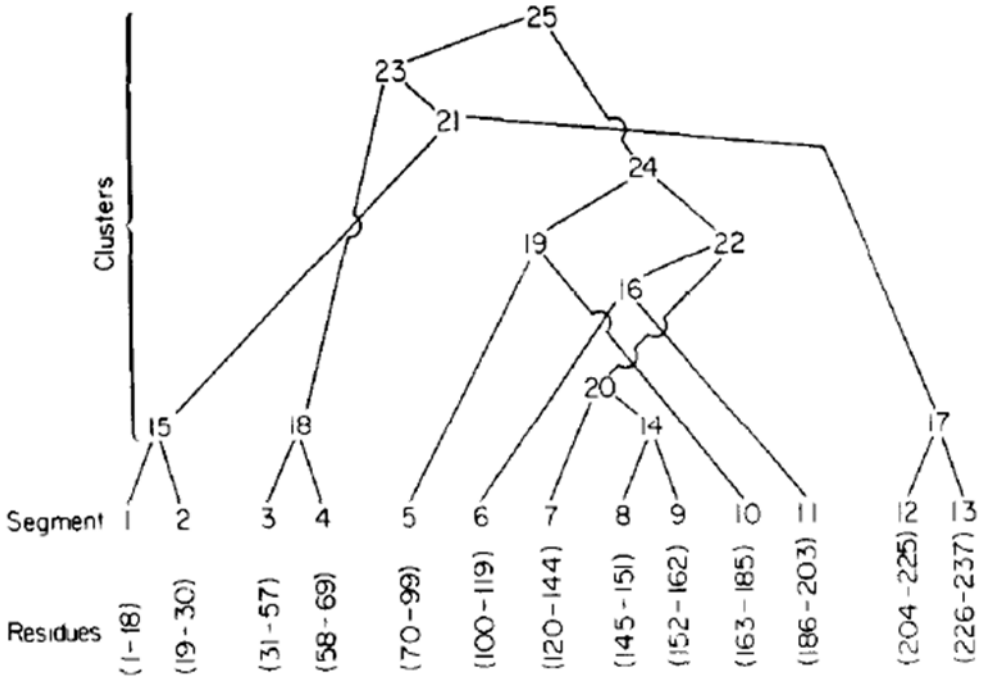

Cuts / Surface area / volume

- Simple idea - cut chain in two pieces
- density of part 1 / versus part 2

- cut so as to maximise density

Problems - one cut is not enough

- A method should be able to split with 1, 2, 3, … cuts
- For 3 cuts with N_{res} positions: $N_{res} \times N_{res} \times N_{res}$
  - really $(N_{res})^{N_{cut}}$

Problems - density

- I want to maximise density
  - density of protein ?
    - number of residues in a volume ?
    - volume ? not sphere
- Contacts are easier than density
  - within a domain there are many contacts
  - between domains - few contacts
  - an approximation

Counting contacts

Do I have many contacts compared to the number of atoms ?

- calculate distance between each $C_i^{\alpha}C_j^{\alpha}$ atoms = d_{ij}
- if d_{ij}< 4 Å, set p_{ij}=1 else p_{ij} = 0
- for a given set of N_{res} atoms (not whole protein)

$$\frac{\sum_{i=1}^{N_{res}} \left(\sum_{j>i}^{N_{res}} p_{ij} \right)}{N_{res}}$$

- not accurate, but easy to calculate

Cutting / contacts

- a protein

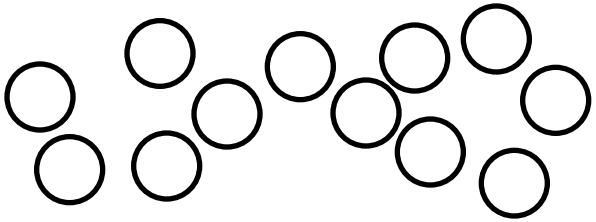

- find close contacts

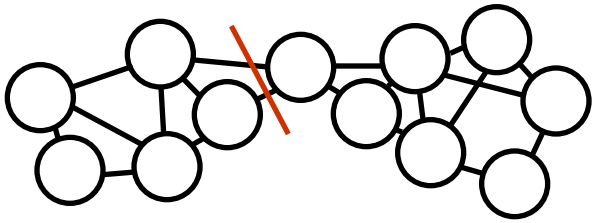

- how can one find the best place(s) to cut ?

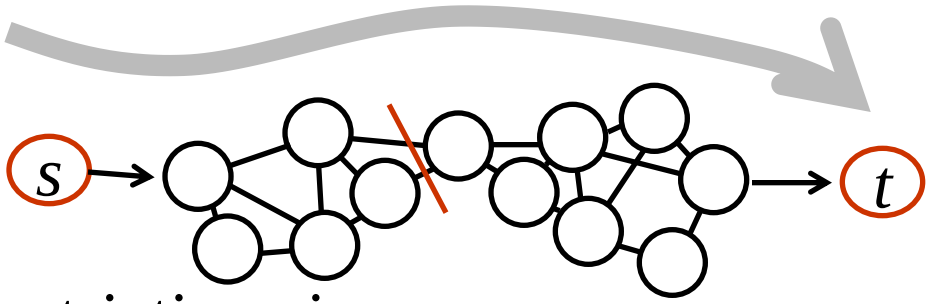

- feed water into *s* (to *t*)
  - find the most blocked restrictive pipes
  - not one, but all that are restrictive

Cutting / contacts

- Flow problem
- Many ways to cut the flow from *s* to *t*

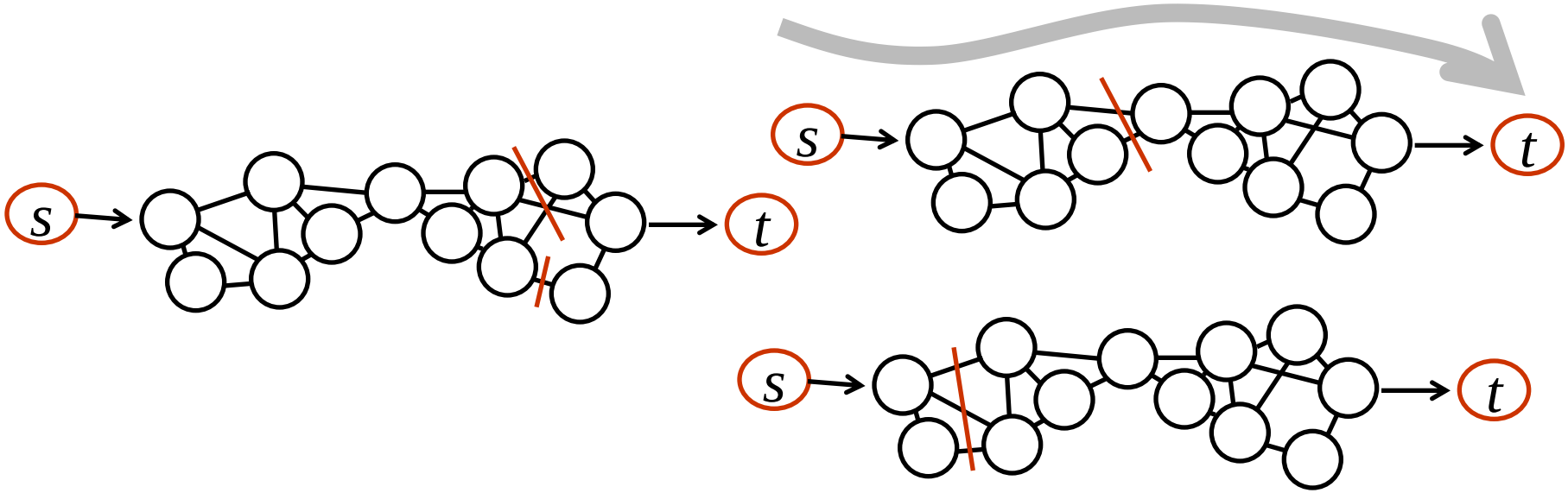

- of all these "*st* cuts" find the one with smallest capacity (flow)
- more interesting - make the pipes different flow capacity
  - how are the residues really touching ? C^{α} C^{α} or C^{α} -sidechain

Cutting / contacts

- Two steps
  1. find the maximum flow from *s* to *t*
  2. cut *s* from *t* at the few most filled pipes

source

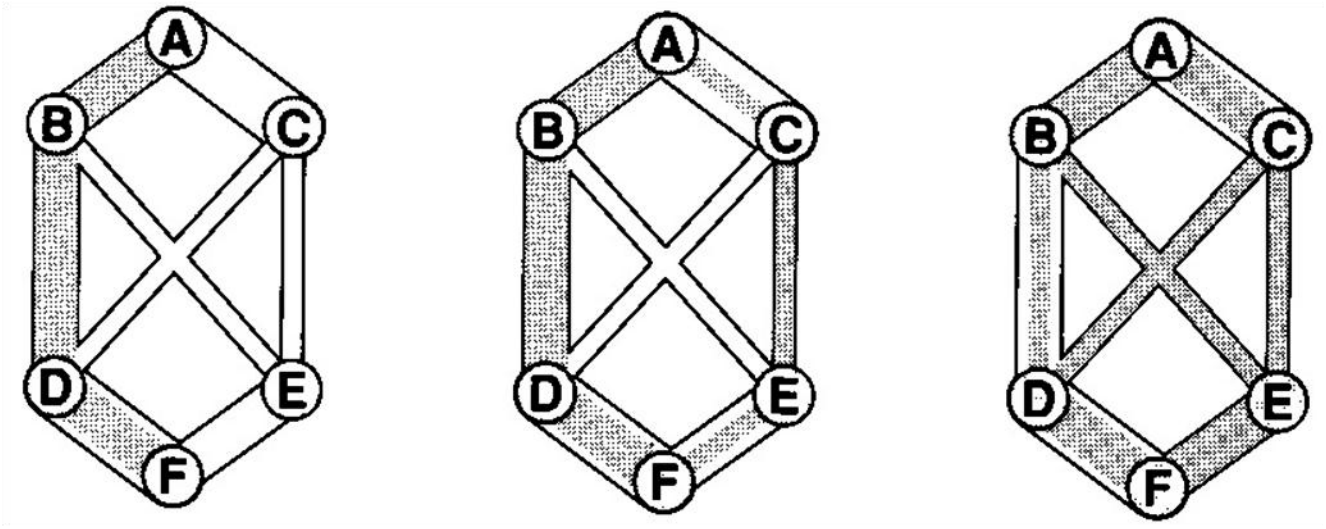

sink

Maximum Flow

rule

- if every path from source to sink has one full edge
  - flow is maximum

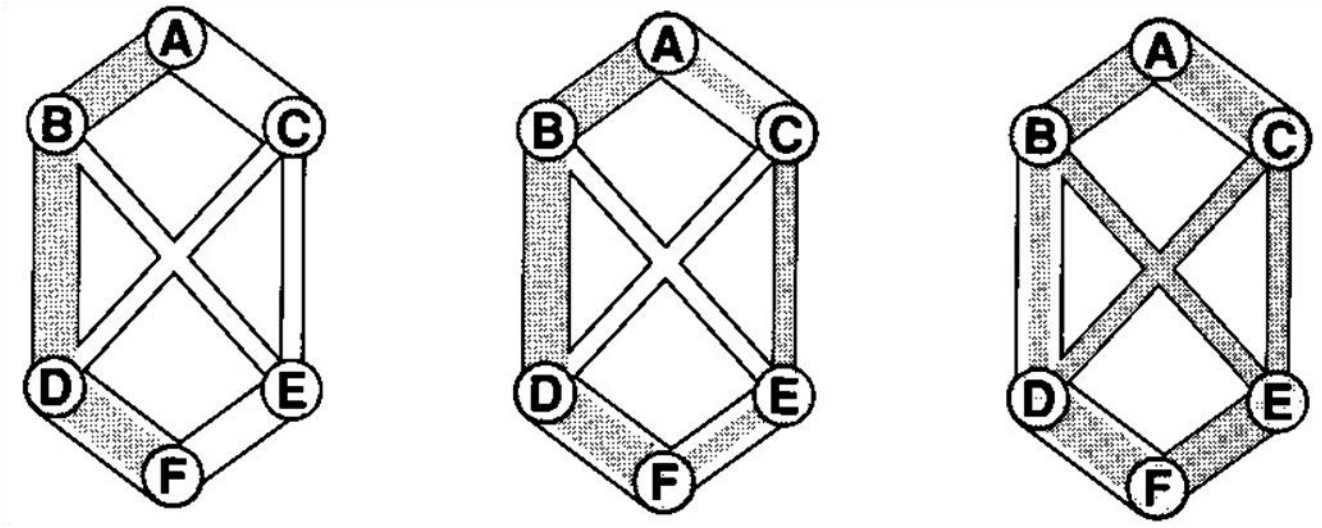

- keep trying every possible path, look to see if there is unused capacity
- we can go backwards

diagram from Sedgewick, R, Algorithms, Addison-Wesley, Reading, (1989)

Maximum Flow

- A B D F note DF is not quite full
- add some A C E F AC, EF are not full
- look at C, switch some capacity to CD (DF)

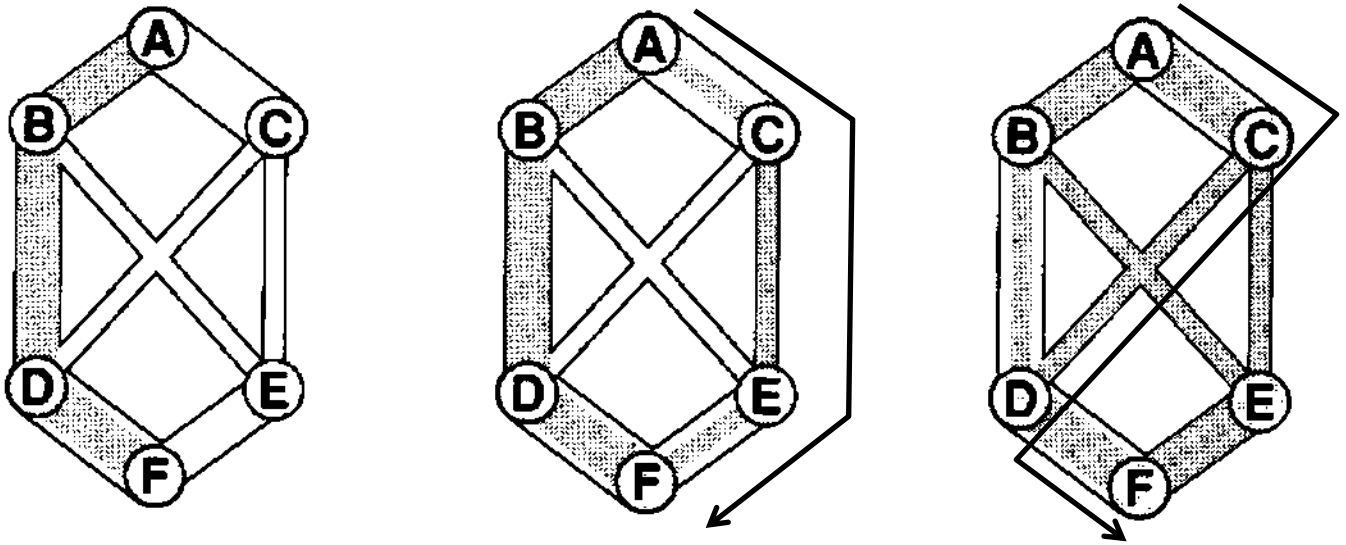

- with some numbers on the edges

diagram from Sedgewick, R, Algorithms, Addison-Wesley, Reading, (1989)

Maximum Flow

- define an example system
  - flow into A
  - out of F
- capacities at each edge vary

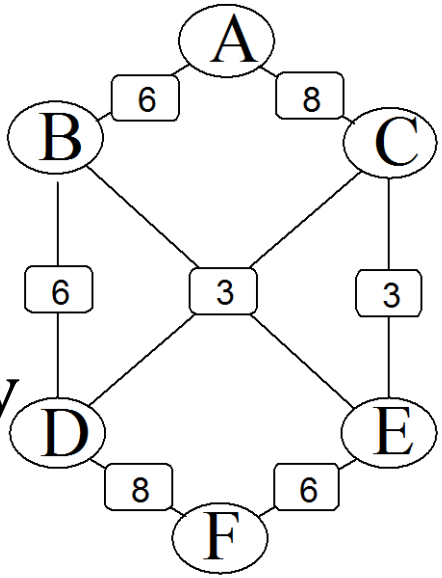

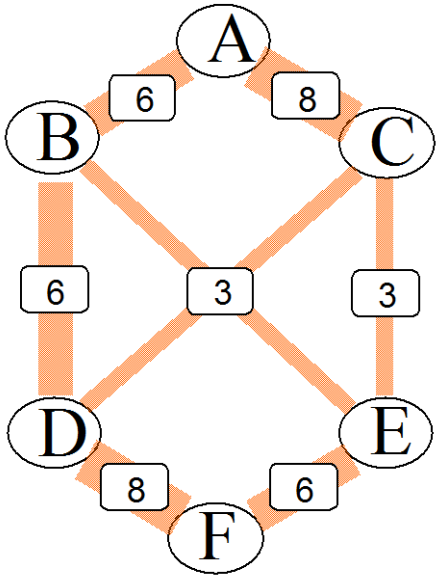

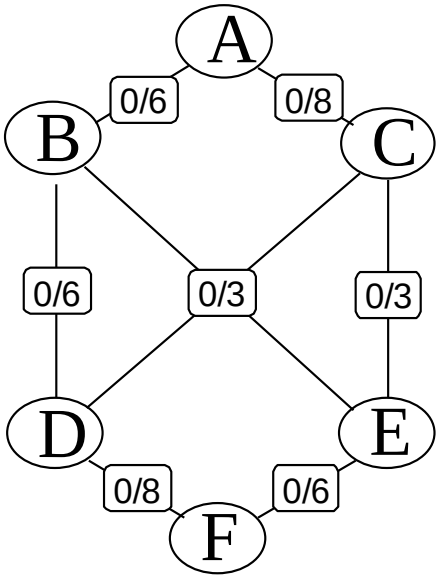

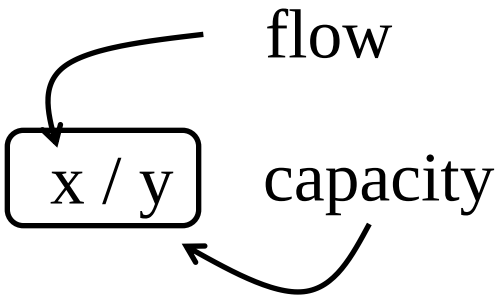

nice java applet: www.cse.yorku.ca/~aaw/Wang/MaxFlowStart.htm

Maximum Flow

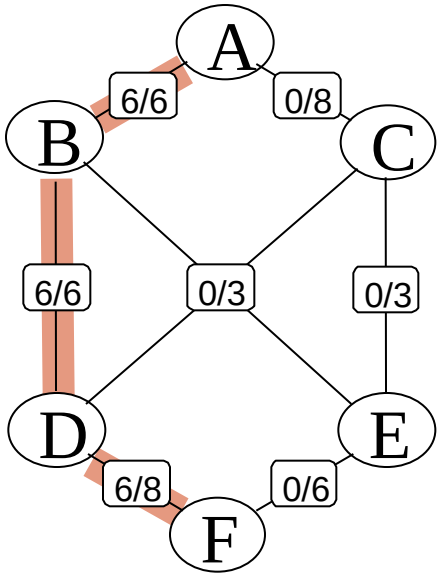

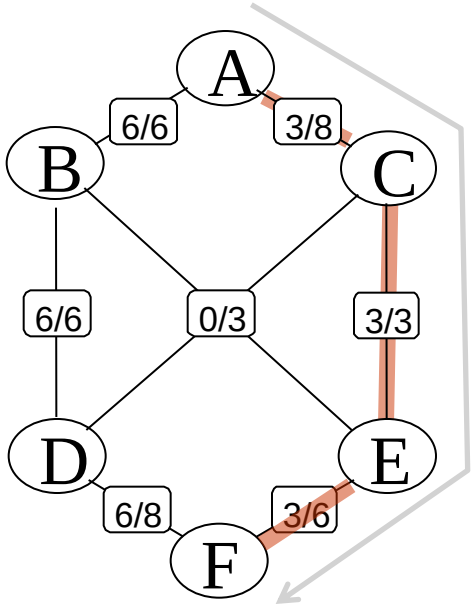

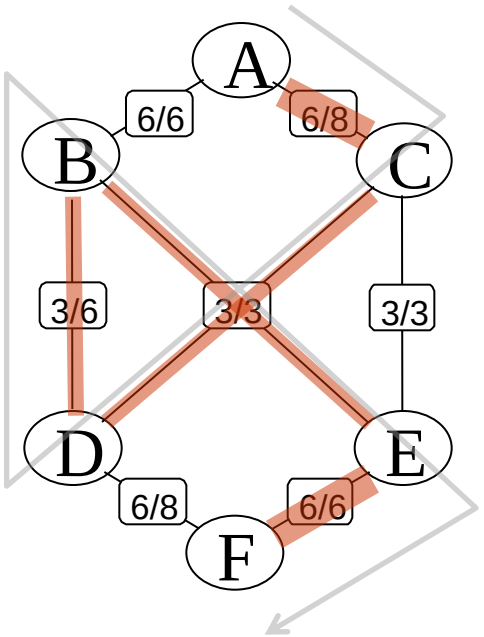

- find a new path (possibly with backwards flow)
  - what is the smallest unused capacity on the path ? Δf
    - > 0 ? send flow Δf in this path

Alternative

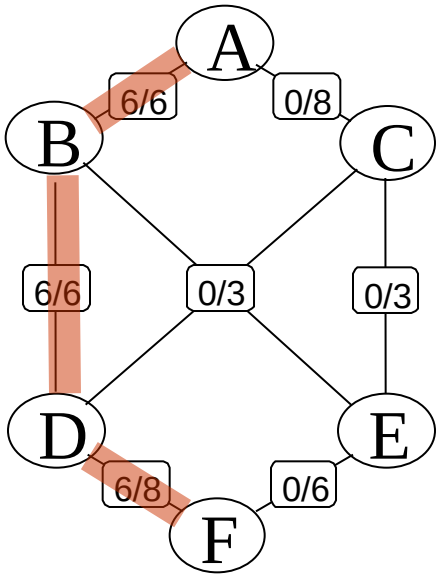

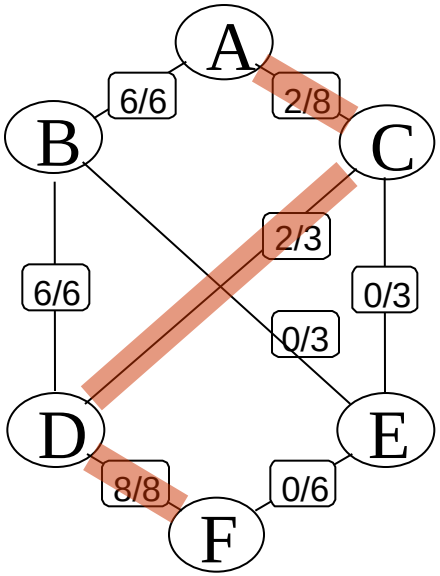

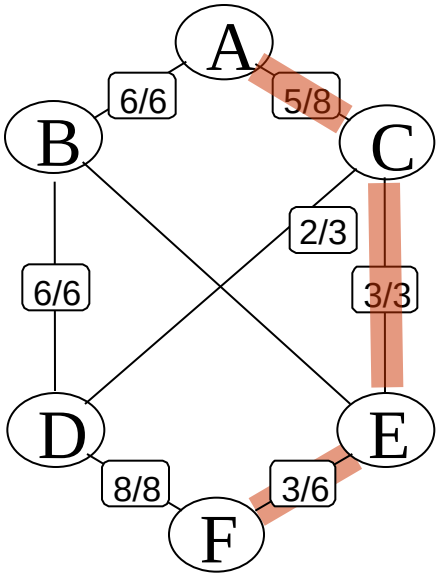

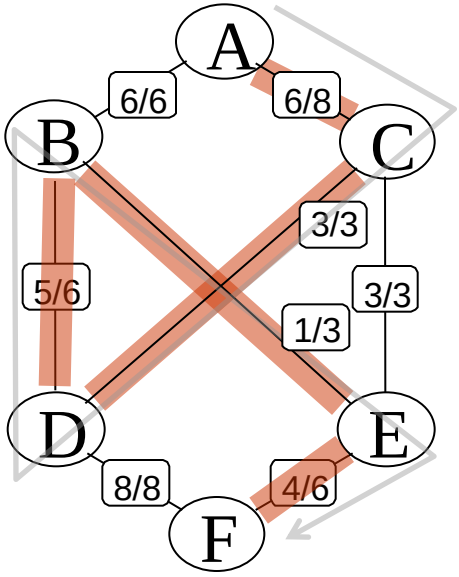

- also ends with flow of 12
- look why this this is definitely time to stop …

alternative

- are there any paths with unfilled pipe
- start at A
  - to the left is filled
  - try A→ C
    - both routes out of C are filled

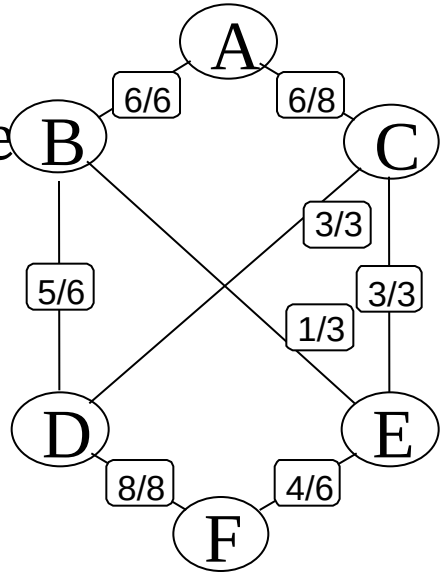

- more solutions ?
- definitely different ways to find solutions
  - different order of visiting paths

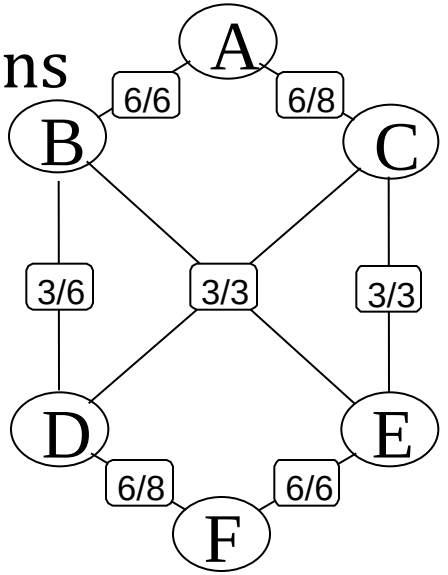

Maximum Flow

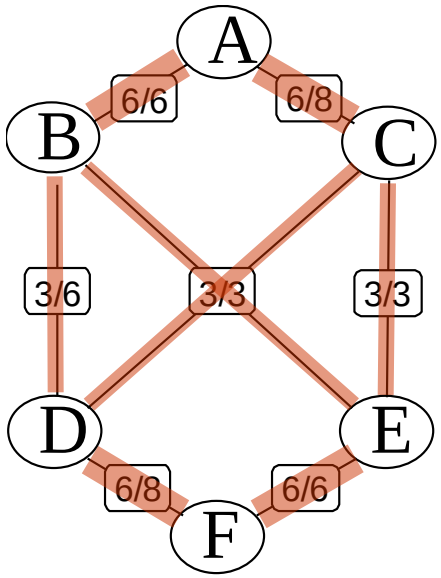

- path = any route from A to F
- is there any path where all edges have extra capacity ?
  - finished - flow is maximum
- algorithm (not optimal)

```
while (flow not maximum / path found)
    add flow to path
```

Our definition - finished when

- every path from source to sink has at least one edge (pipe) which is full

Is this efficient ?

Efficiency

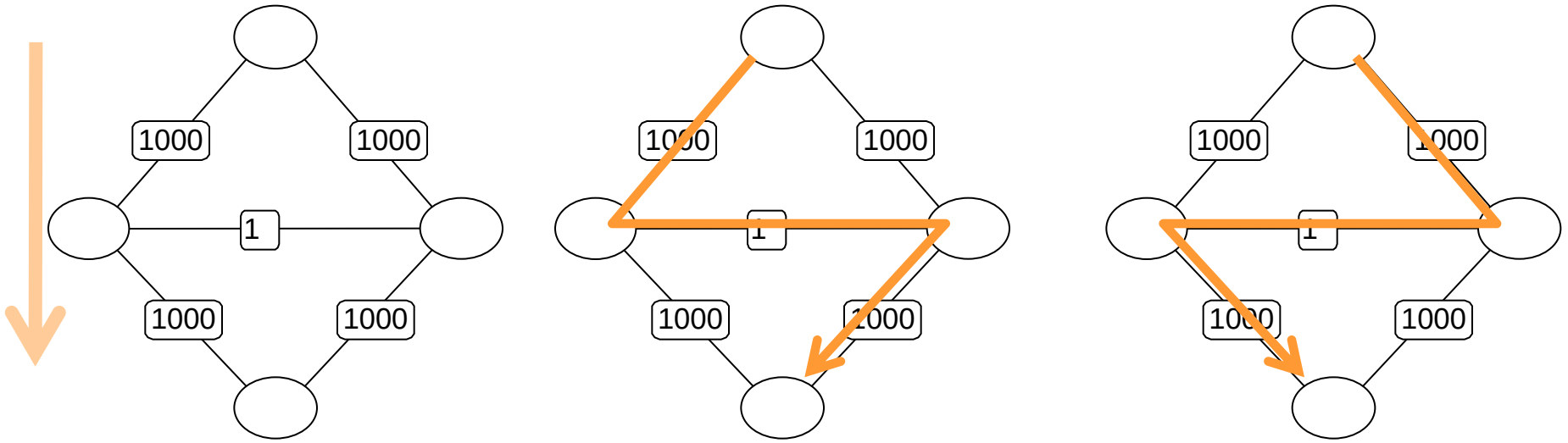

- worst possible selection of path order would require 2000 iterations

First part of procedure finished

- flow is maximum
- next
  - where to cut graph

Cutting graph

- find ways to cut network, max flow = 12
  - AB, AC capacity =14
  - BD, BE, AC capacity = 17
    - both bigger than flow (12)
  - better
  - for each path
    - find first full pipe - cut
    - AB, CD, CE capacity = 12
    - = max flow
    - best cut

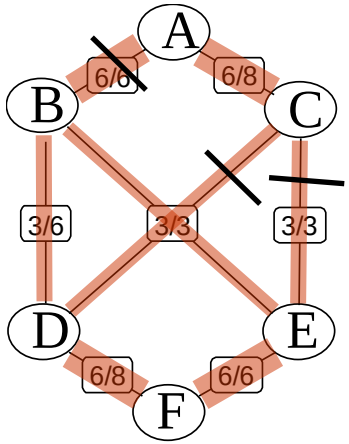

Cutting graph

- If the capacity across our set of cuts = maximum flow
  - it is a "minimum cut"

  - smallest connection between two parts of graph
  - graph / network / protein is broken into two parts / domains

- Useful yet ?
  - no mention of finding source *s* and sink *t*
  - details - efficiency not mentioned

Network flow and proteins

- Source
  - find a surface residue
  - connect an s
  - connect to nearby surface residues
- Sink
  - find a surface residue far away, connect to *t*
- ad hoc ? arbitrary ? optimal ?
  - maybe not critical
- Multiple domains ?

```
while (domains not too small)
   keep trying to split
```

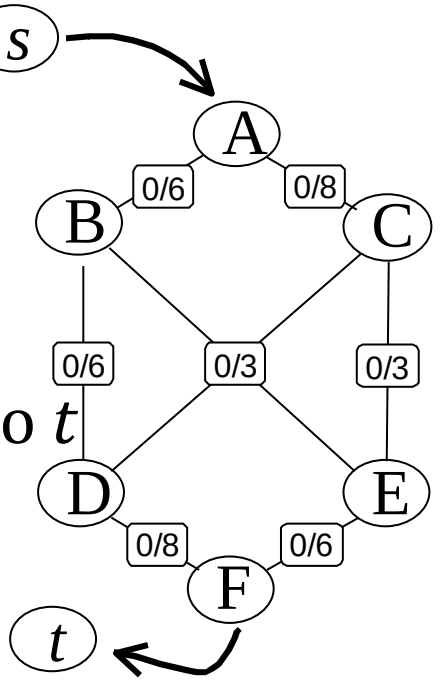

Splitting - near neighbours / Ising spins

Background story - Ising spin model

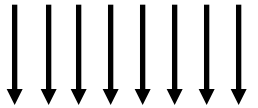

- energy of spin *i* depends on *i*-1, *i*+1
- energy can be good 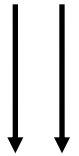 or
- or bad 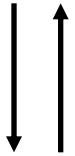

- for lots of spins

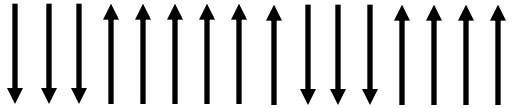

  - islands of same spin
- can be generalised to 2D, 3D
- finding low energies ? Simplest method
  - try to flip a random spin
    - accept flip if energy improves
    - sometimes accept if energy goes up (probabilistic)

Taylor, W. Prot. Eng. (1999) 12, 203-216, Protein structural domain identification

Splitting - near neighbours / Ising spins

- Slightly better method
  - while (energy still high)
    - for each spin
      - change to be same as average of *n* neighbours

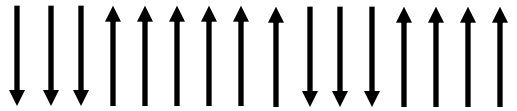

- Protein version
  - for any known structure
    - easy to make list of neighbours of each residue
  - residues close in space should be in similar domains

Splitting - near neighbours / Ising spins

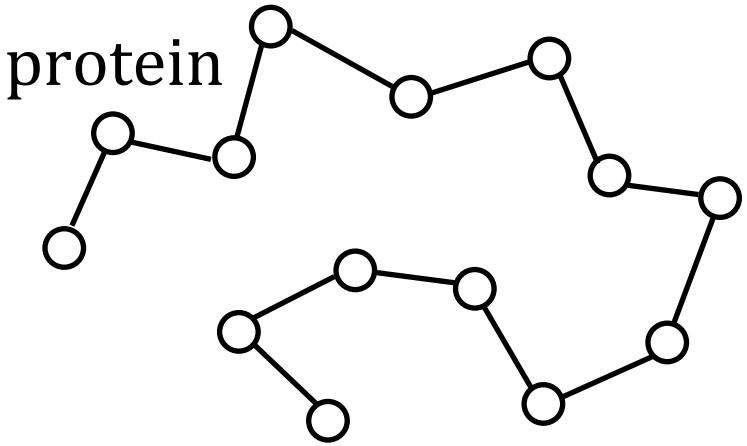

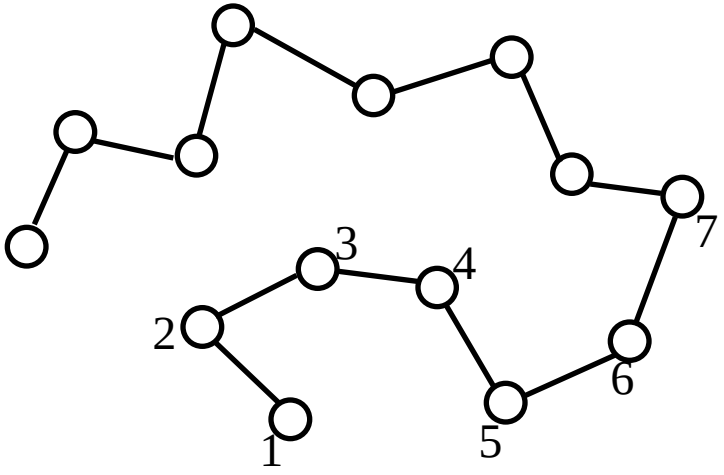

- label all points with a number

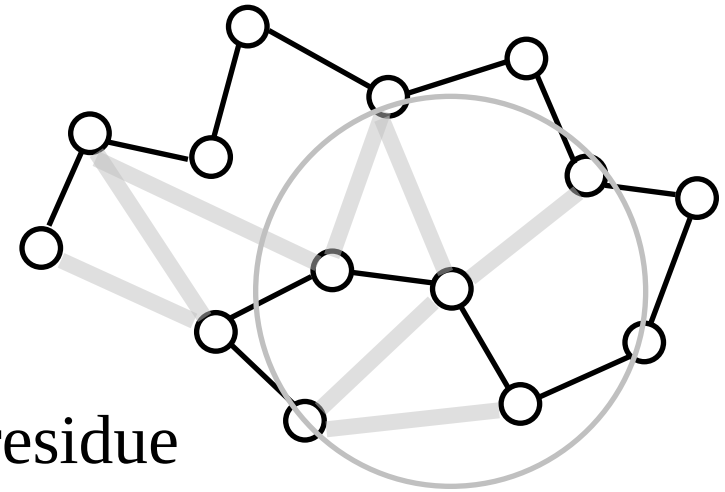

- make a list of neighbours for each residue

Splitting - near neighbours / Ising spins

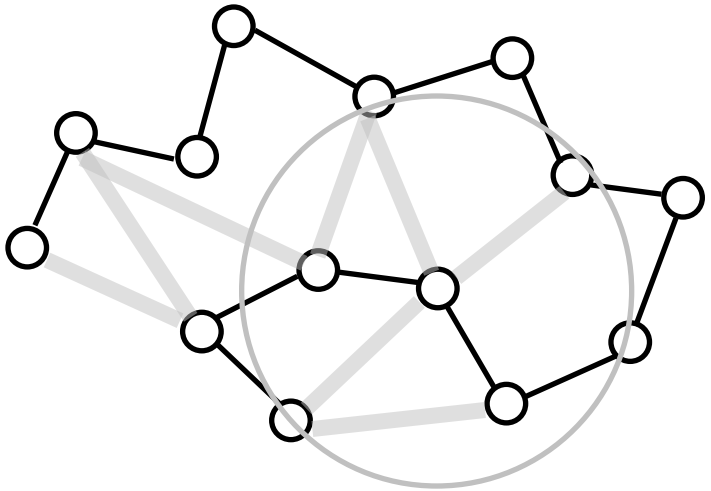

- label of a residue is m_i

  while (labels changing)

  for each residue j

$$m_{av} = {}^{1}\!/_{N_{neighbour}} \sum_{i \in \text{neighbours}} m_i$$

  if $(m_{av} > m_j)$

  $m_j\,(new) = m_j\,(old) + 1$

  else if $(m_{av} < m_j)$

  $m_j\,(new) = m_j\,(old) - 1$

step	residue number								
0	1	2	3	4	5	6	7	8	…
1	2	3	3	4	6	7	8	8	…
2	2	2	4	3	5	8	9	9	
…									

Splitting - near neighbours / Ising spins

- Properties of Taylor / Ising spin-inspired method
  - optimism
    - will converge and become stable
  - requires threshold - what is a neighbour
    - can use sophisticated averaging - distance dependent
  - may converge to 2, 3, … domains

Methods so far

1. simple - look for single cut points and maximise density

2. Crippen / hierarchical clustering

3. Network flow

4. Ising spin / Taylor

- All methods have arbitrary numbers

Why are methods so complicated ?

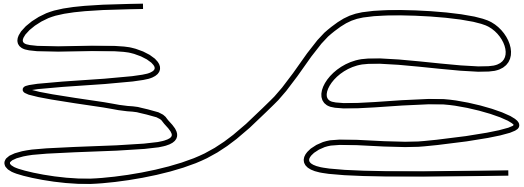

- If we cut protein chain once
  - methods are easy - use density criterion
- cut protein twice ? more ? remember $(N_{res})^{N_{cut}}$

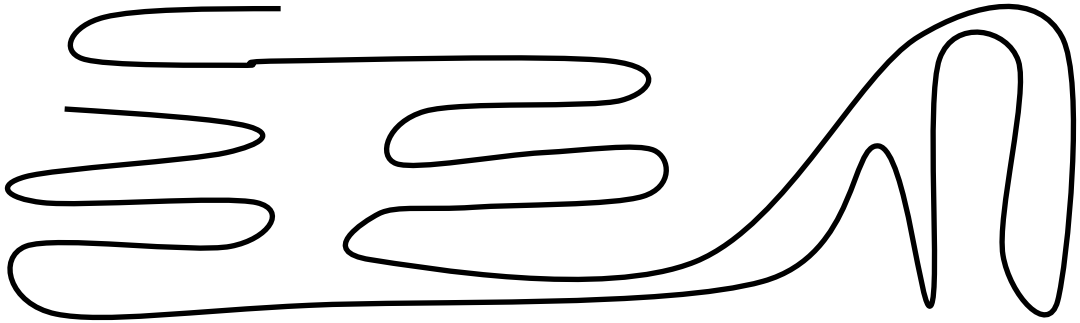

- How many domains ?
  - Crippen / clustering method - whatever you want
  - Network flow - repeatedly split and eventually stop
  - Taylor / Ising - may converge to > 2 domains

Crippen / hierarchical clustering

- at what level of hierarchy do I cut tree ?

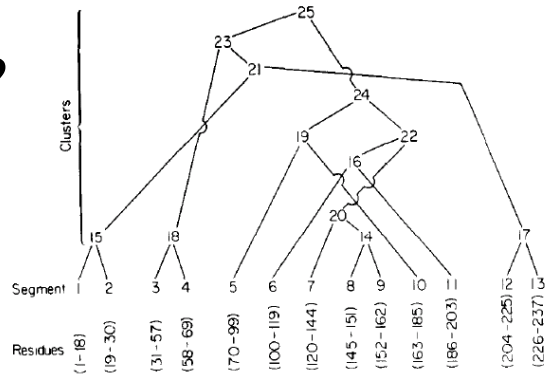

Network flow

- what constitutes a contact ? (any 2 atom < 4 Å ?)
- give pipes (edges) more weight for different kinds of contacts
- are solutions unique ?
  - probably in practice
- when do we stop splitting domains ?

Taylor / Ising spin method

- what constitutes a contact ? how many Å ?
- type of averaging to get m_{av} ?
- when does one converge ?

Elegance

- do methods work as described ? not really

- all authors report problems - example
  - Taylor finds different results for α-helical and β-sheet regions
  - simple explanation ? distances within / between secondary structure are very different
  - method with multiple distance criteria = ugly

Do methods work

- with many fixes and tuning - yes
  - distance criteria, thresholds

Do methods agree ?

- Only ask question if you agree to think in terms of structure
- Answer will be different in terms of evolution or sequences

- Criteria
  - how many domains inside a protein ?
  - where are the domain borders ?

Number of domains

- test set of few hundred proteins
- compare against author's estimate
- 80-90 % agreement

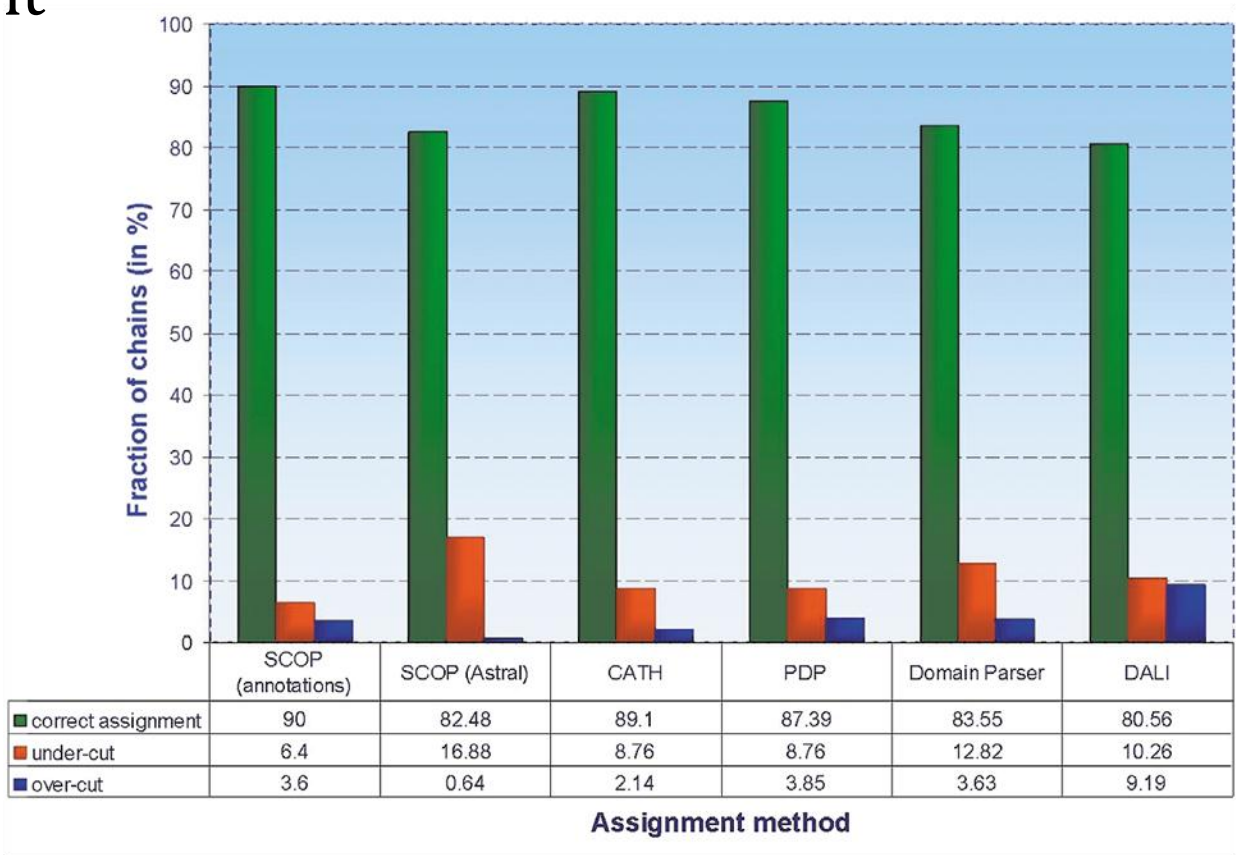

	SCOP (annotations)	SCOP (Astral)	CATH	PDP	Domain Parser	DALI
correct assignment	90	82.48	89.1	87.39	83.55	80.56
under-cut	6.4	16.88	8.76	8.76	12.82	10.26
over-cut	3.6	0.64	2.14	3.85	3.63	9.19

Veretnik, S., Bourne, P.E., Alexandrov, N.N., Shindyalov, J. Mol. Biol. (2004) 339, 647-678, Toward… domains in proteins

How many domains per protein ?

- Same set of 467 proteins

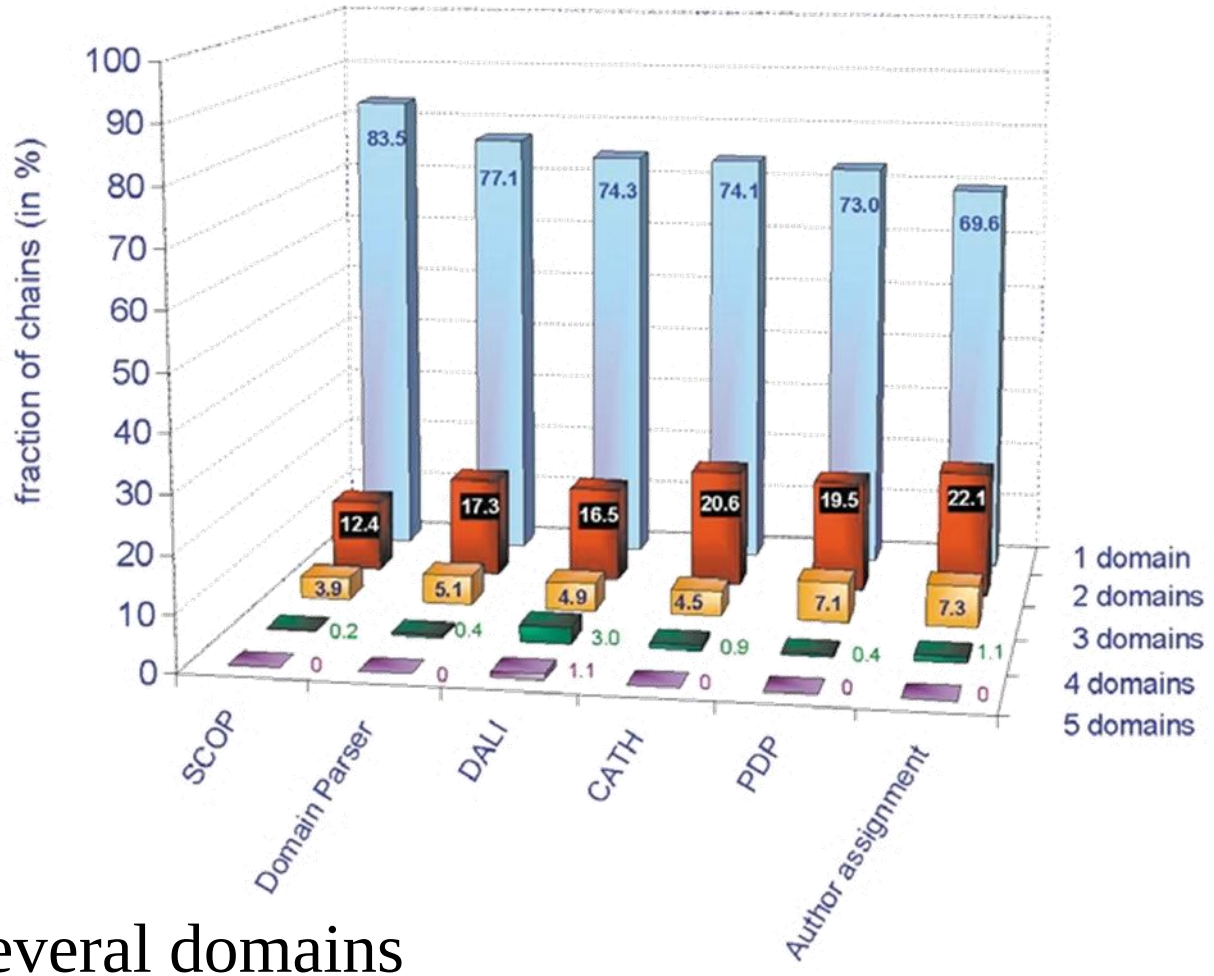

- authors split into several domains
- "SCOP" prefers smaller number of domains

Veretnik, S., Bourne, P.E., Alexandrov, N.N., Shindyalov, J. Mol. Biol. (2004) 339, 647-678, Toward… domains in proteins

Agreement ?

- lots of room for differences

Some statistics

- how big is a protein domain ?
- peaks near 60 and 130 residues

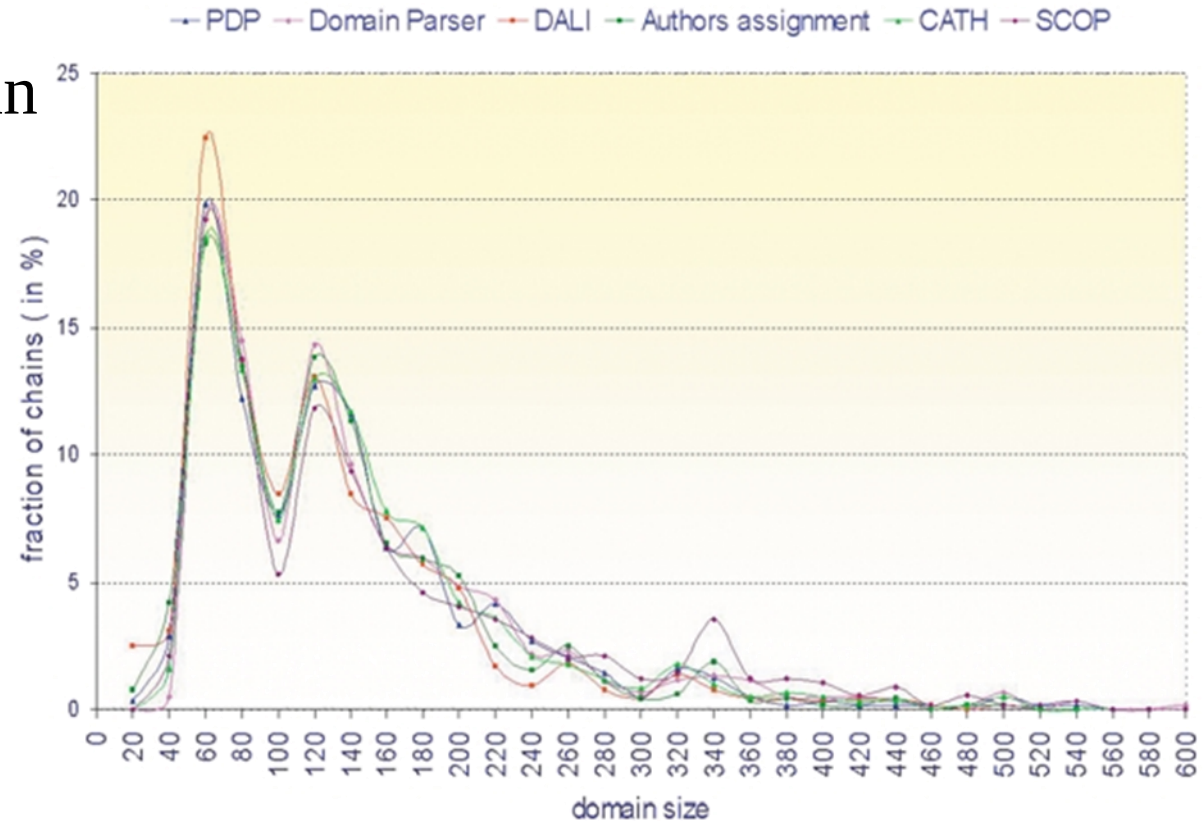

Veretnik, S., Bourne, P.E., Alexandrov, N.N., Shindyalov, J. Mol. Biol. (2004) 339, 647-678, Toward… domains in proteins

How complicated are domains ?

- Justification for complicated domain recognition
  - single cuts, double cuts in chains are not enough

- what percentage of domains are built from
  - 1 chain ?
  - 2 chains ? …

- in "DALI", 23 % of domains are not continuous (multiple crosses of chain)

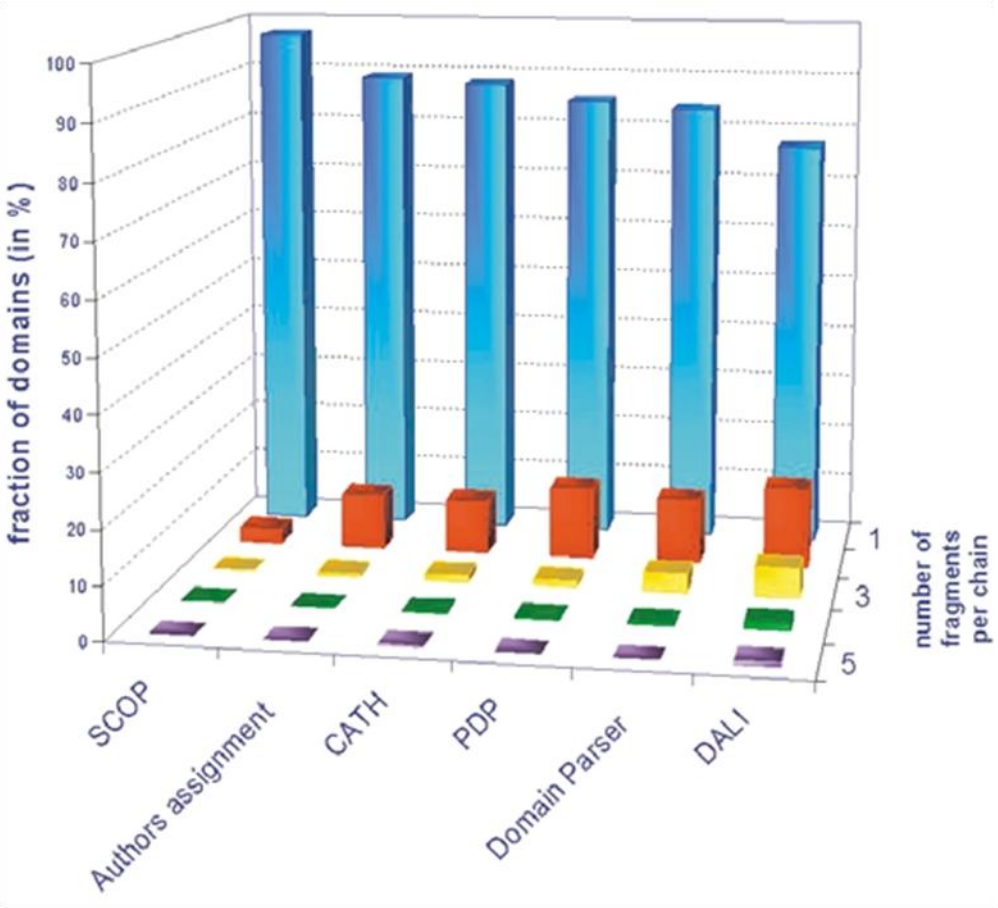

Veretnik, S., Bourne, P.E., Alexandrov, N.N., Shindyalov, J. Mol. Biol. (2004) 339, 647-678, Toward… domains in proteins

Evolutionary picture

- original claim
  - domains are units that move as a module in evolution

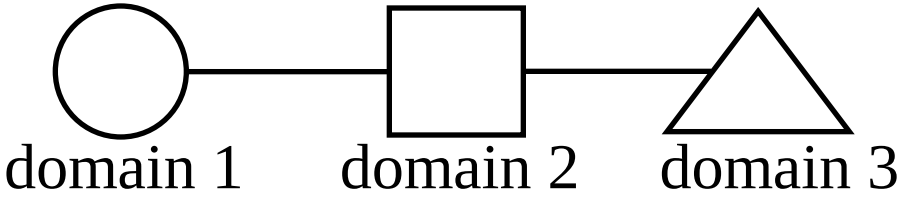

- if we see multiple cuts 10-20 % of time
  - picture is much less clear

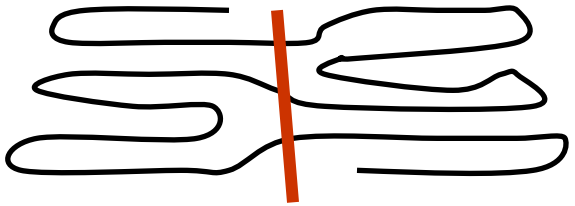

Summary

- Domain definitions
  - functional, structural, sequence based
- Finding domains
  - relies on contacts, density
  - method must be able to handle multiple crossings of chain
- We considered
  - clustering / hierarchical
  - network flow
  - Taylor / Ising spin-inspired
- Methods do not agree with each other
- Some trends in size and number of domains
- Real proteins are not as simple as evolutionary picture